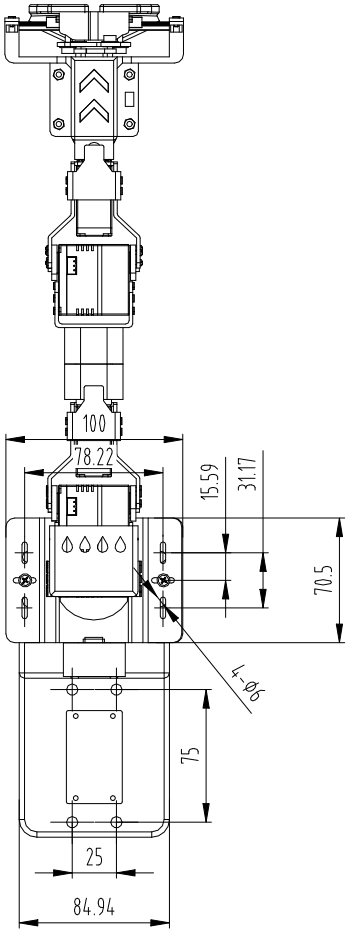
100
78.22
15.59
31.17
70.5
4-Ø6
75
25
84.94

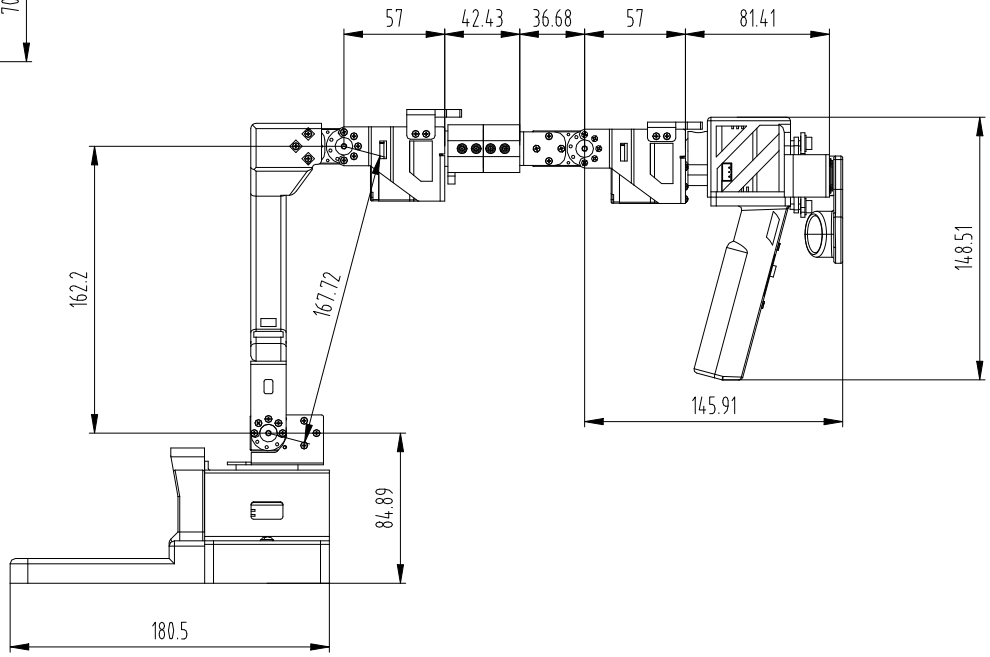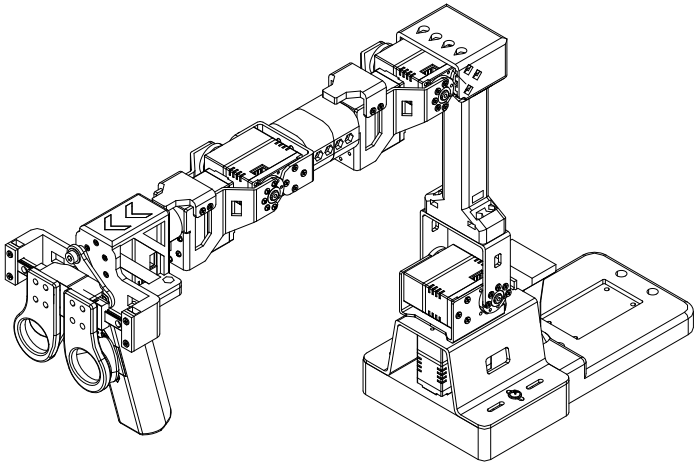
57
42.43
36.68
57
81.41
162.2
167.72
148.51
145.91
84.89
180.5